MENNENS | Lifting Solutions Group
Axel Johnson International

Container Lifting Lug CLT Grade 8

Product information



Container lifting lug set for lifting of standard containers in the corner fittings on top. Only for vertical lifting slings. A set contains 4 lugs and are to be used together with a lifting beam. The lugs suits standard ISO corner boxes.

Features: Provided with barrier which locks in the corner fittings after the lug is rotated 90° which prevent the lug to unhook. No part of the lug is outside the containers sides.

... *Read more*

Material: Alloy steel.
Marking: CE-mark
Temperature range: -40°C up to +100°C
Warning: Do not use with 4-leg slings. Only for straight lifting.

Safety factor: 4:1
Grade: 8

Mennens Nederland
website@mennens.nl
+31 (0)10 4373033

© November 2026 - All Rights Reserved

MENNENS | Lifting Solutions Group
Axel Johnson International

Container Lifting Lug CLT Grade 8

Blueprint

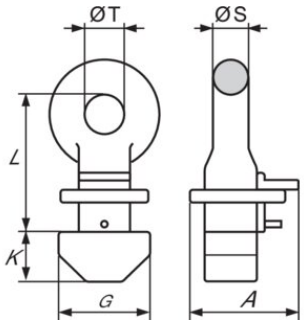

Technical data

Part code	Code	WLL ton	EWL mm	A mm	G mm	K mm	L mm	S mm	T mm	Weight kg
4298CLT56	CLT-56	56	160	123	101	57	160	39	45	32

Mennens Nederland
website@mennens.nl
+31 (0)10 4373033

© November 2026 - All Rights Reserved