MENNENS | Lifting Solutions Group
Axel Johnson International

Heavy Duty Bow Shackle BN Green Pin Polar® P-6031

Product information

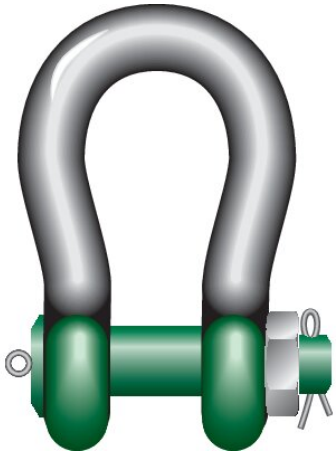

The Green Pin Polar® Heavy Duty Shackle BN is a high load capacity bow shackle with a safety bolt that has been optimized for use in low temperatures. The shackle can be used in extreme climatic conditions, down to -40°C (-40°F). The shackle also offers a double safety (split pin and safety bolt) which prevents accidental unscrewing of the pin. Of course, the Green Pin Polar® Heavy Duty Shackle BN conforms to a wide range of certifications. The Green Pin Polar® Heavy Duty Shackle BN is suitable for both one-leg systems and multi-leg systems and is available with a working load limit of 120t or 1500t.

Certification on request: 2.1, 2.2, 3.1, MTCa, MTCb, LROS, MPIa, USa ... *Read more*

Material: Bow and pin alloy steel, quenched and tempered
Marking: CE-mark
Temperature range: -40°C up to +200°C
Finish: Shackle bow painted silver, pin painted green. 120 tons shackle is hot dipped galvanized.

Safety factor: 5:1
Grade: 8

Mennens Nederland
website@mennens.nl
+31 (0)10 4373033

© November 2026 - All Rights Reserved

MENNENS | Lifting Solutions Group
Axel Johnson International

Heavy Duty Bow Shackle BN Green Pin Polar® P-6031

Blueprint

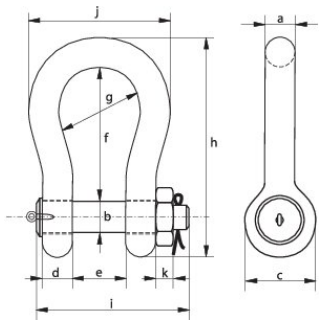

Technical data

Part code	WLL ton	a mm	b mm	c mm	d mm	e mm	f mm	g mm	h mm	i mm	j mm	k mm	Weight kg
420112000640	120	95	95	208	95	147	400	238	647	453	428	50	110
420115000640	150	105	108	238	105	169	410	275	688	496	485	50	160
420120000640	200	120	130	279	120	179	513	290	838	564	530	70	235
420125000640	250	130	140	299	130	205	554	305	904	614	565	70	295
420130000640	300	140	150	325	140	205	618	305	996	644	585	80	368
420140000640	400	170	175	376	164	231	668	325	1,114	690	665	70	560
420150000640	500	180	185	398	164	256	718	350	1,190	720	710	70	685
420160000640	600	200	205	444	189	282	718	375	1,243	810	775	70	880
420170000640	700	210	215	454	204	308	718	400	1,263	870	820	70	980
420180000640	800	210	220	464	204	308	718	400	1,270	870	820	70	1,100
420190000640	900	220	230	485	215	328	718	420	1,296	920	860	70	1,280
420110000641	1,000	240	240	515	215	349	718	420	1,336	940	900	70	1,460
420112500641	1,250	260	270	585	230	369	768	450	1,456	1,025	970	70	1,990
420115000641	1,500	280	290	625	230	369	818	450	1,556	1,025	1,010	70	2,400

Mennens Nederland
website@mennens.nl
+31 (0)10 4373033

© November 2026 - All Rights Reserved